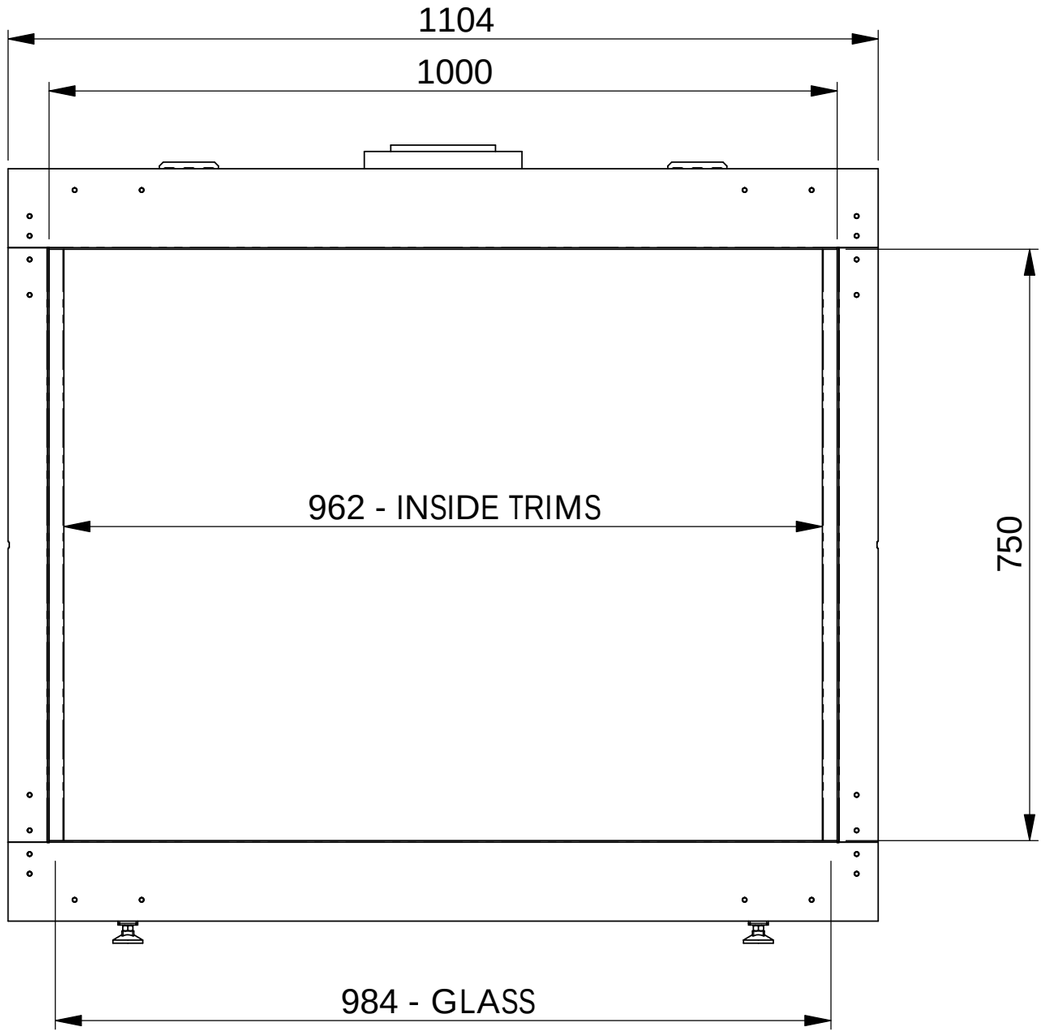
1104
1000
962 - INSIDE TRIMS
750
984 - GLASS

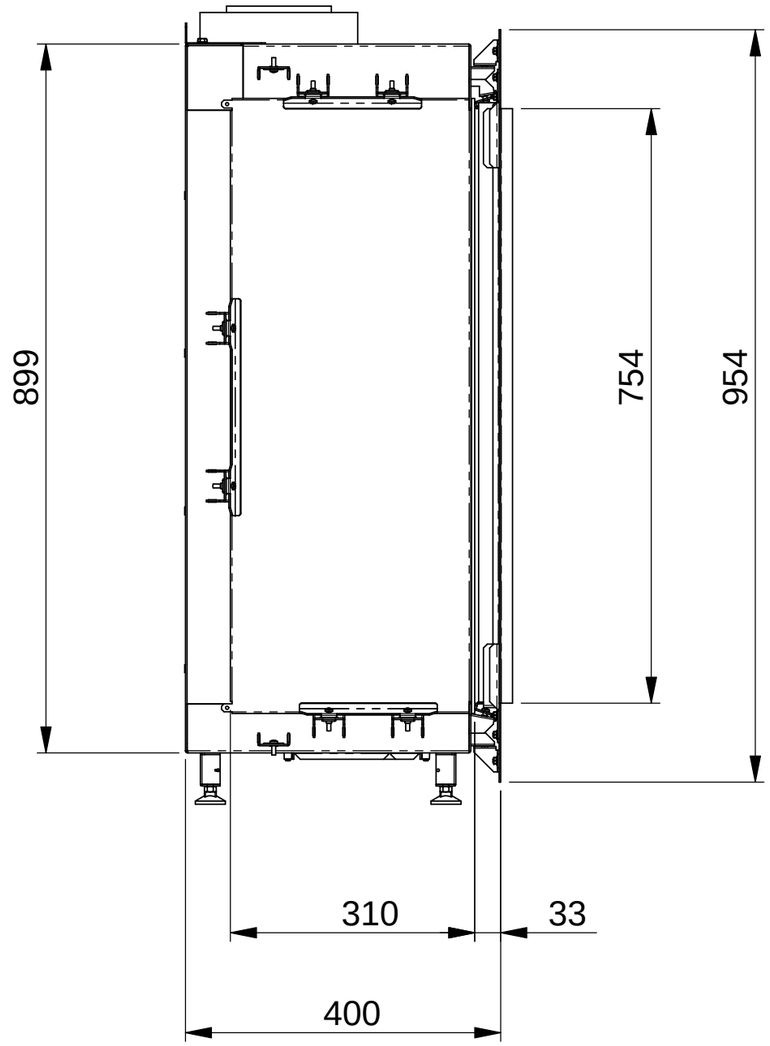
899
754
954
310
33
400

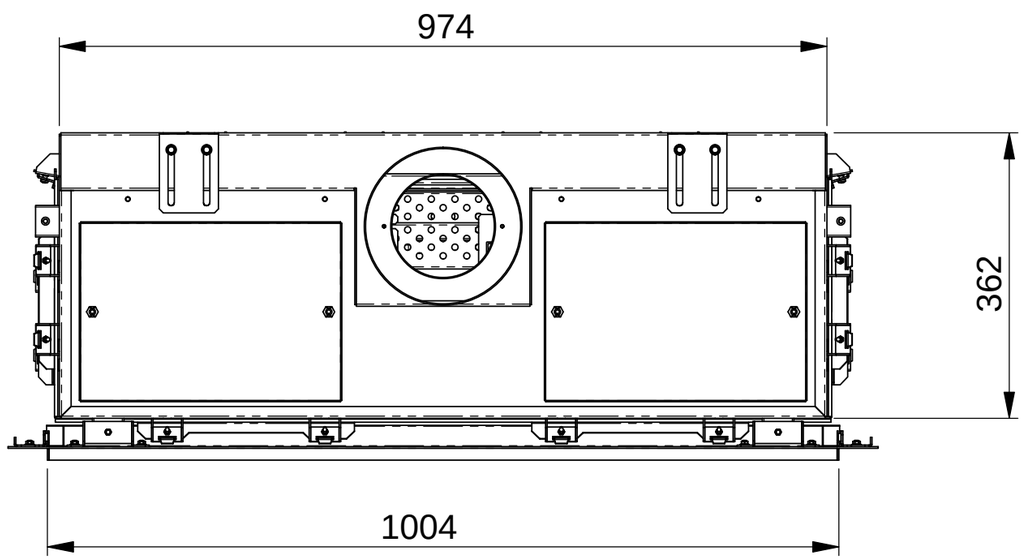
974
362
1004